Smart String Inverter

HUAWEI

inter solar award 2019 WINNER

Active Safety

AI Powered Arcing Protection

Higher Yields

Up to 30% More Energy with Optimizer

Flexible Communication

WLAN, Fast Ethernet, 4G Communication Supported

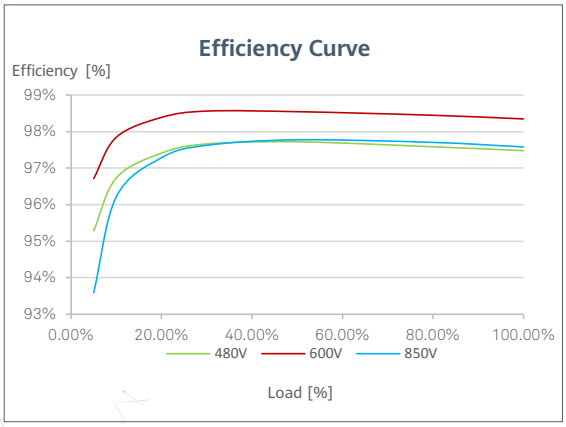

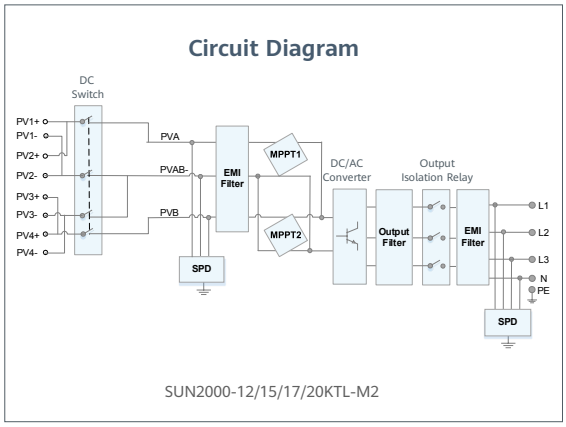

SUN2000-12/15/17/20KTL-M2

SOLAR.HUAWEI.COM/EU/

Brinder Gandhi +91 98991 00207 | Dhirendra Kumar Singh +91 76780 36677 | Swapnil Bhonde +91 76780 99686

IMPULSE GREEN ENERGY

SUN2000-12/15/17/20KTL-M2

Technical Specification

Technical Specification	SUN2000 -12KTL-M2	SUN2000 -15KTL-M2	SUN2000 -17KTL-M2	SUN2000 -20KTL-M2
Efficiency				
Max. efficiency	98.50%	98.65%	98.65%	98.65%
European weighted efficiency	98.00%	98.30%	98.30%	98.30%
Input				
Recommended max. PV power [1]	18,000 Wp	22,500 Wp	25,500 Wp	30,000 Wp
Max. input voltage [2]	1,080 V			
Operating voltage range [3]	160 V ~ 950 V			
Start-up voltage	200 V			
Rated input voltage	600 V			
Max. input current per MPPT	22 A			
Max. short-circuit current	30 A			
Number of MPP trackers	2			
Max. number of inputs	4			
Output				
Grid connection	Three phase			
Rated output power	12,000 W	15,000 W	17,000 W	20,000 W
Max. apparent power	13,200 VA	16,500 VA	18,700 VA	22,000 VA
Rated output voltage	220 Vac / 380 Vac, 230 Vac / 400 Vac, 3W + N + PE			
Rated AC grid frequency	50 Hz / 60 Hz			
Max. output current	20 A	25.2 A	28.5 A	33.5 A
Adjustable power factor	0.8 leading ... 0.8 lagging			
Max. total harmonic distortion	≤ 3 %			
Features & Protections				
Input-side disconnection device	Yes			
Anti-islanding protection	Yes			
AC over-current protection	Yes			
AC short-circuit protection	Yes			
AC over-voltage protection	Yes			
DC reverse-polarity protection	Yes			
DC surge protection	TYPE II			
AC surge protection	Yes, compatible with TYPE II protection class according to EN/IEC 61643-11			
Residual current monitoring unit	Yes			
Arc fault protection	Yes			
Ripple receiver control	Yes			
Integrated PID recovery [4]	Yes			
General Data				
Operation temperature range	-25 ~ + 60 °C (-13 °F ~ 140 °F) (Derating above 45 °C @ Rated output power)			
Relative humidity	0 % RH ~ 100% RH			
Max. operating altitude	0 ~ 4,000 m (13,123 ft.) (Derating above 2000 m)			
Cooling	Natural Convection			
Display	LED Indicators; Integrated WLAN + FusionSolar App			
Communication	RS485; WLAN/Ethernet via Smart Dongle-WLAN-FE (Optional) 4G / 3G / 2G via Smart Dongle-4G (Optional)			
Weight (with mounting plate)	25 kg			
Dimensions (W x H x D) (incl. mounting plate)	525 x 470 x 262 mm (20.7 x 18.5 x 10.3 inch)			
Degree of protection	IP65			
Optimizer Compatibility				
DC MBUS compatible optimizer	SUN2000-450W-P			
Standard Compliance (more available upon request)				
Safety	EN/IEC 62109-1, EN/IEC 62109-2			
Grid connection standards	G98, G99, EN 50438, CEI 0-21, CEI 0-16, VDE-AR-N-4105, VDE-AR-N-4110, AS 4777, C10/11, ABNT, UTE C15-712, RD 1699, RD 661, PO 12.3, TOR D4, NRS 097-2-1, IEC61727, IEC62116, DEWA 2.0			

*1 Inverter max input PV power is 40,000 Wp when long strings are designed and fully connected with SUN2000-450W-P power optimizers.
*2 The maximum input voltage is the upper limit of the DC voltage. Any higher input DC voltage would probably damage inverter.
*3 Any DC input voltage beyond the operating voltage range may result in inverter improper operating.
*4 SUN2000-3~10KTL-M1 raises potential between PV- and ground to above zero through integrated PID recovery function to recover module degradation from PID. Supported module types include: P-type (mono, poly), N-type (nPERT, HIT)

Version No.:02-(20190512)

SOLAR.HUAWEI.COM/EU/

Brinder Gandhi +91 98991 00207 | **Dhirendra Kumar Singh** +91 76780 36677 | **Swapnil Bhonde** +91 76780 99686

IMPULSE GREEN ENERGY